air tools

PARTS LIST

■ *Chipping Hammer*
【Model】AA15A<AA10A>

nks air tools
株式会社中谷機械製作所
NAKATANI KIKAI CO.,LTD.
MADE IN JAPAN

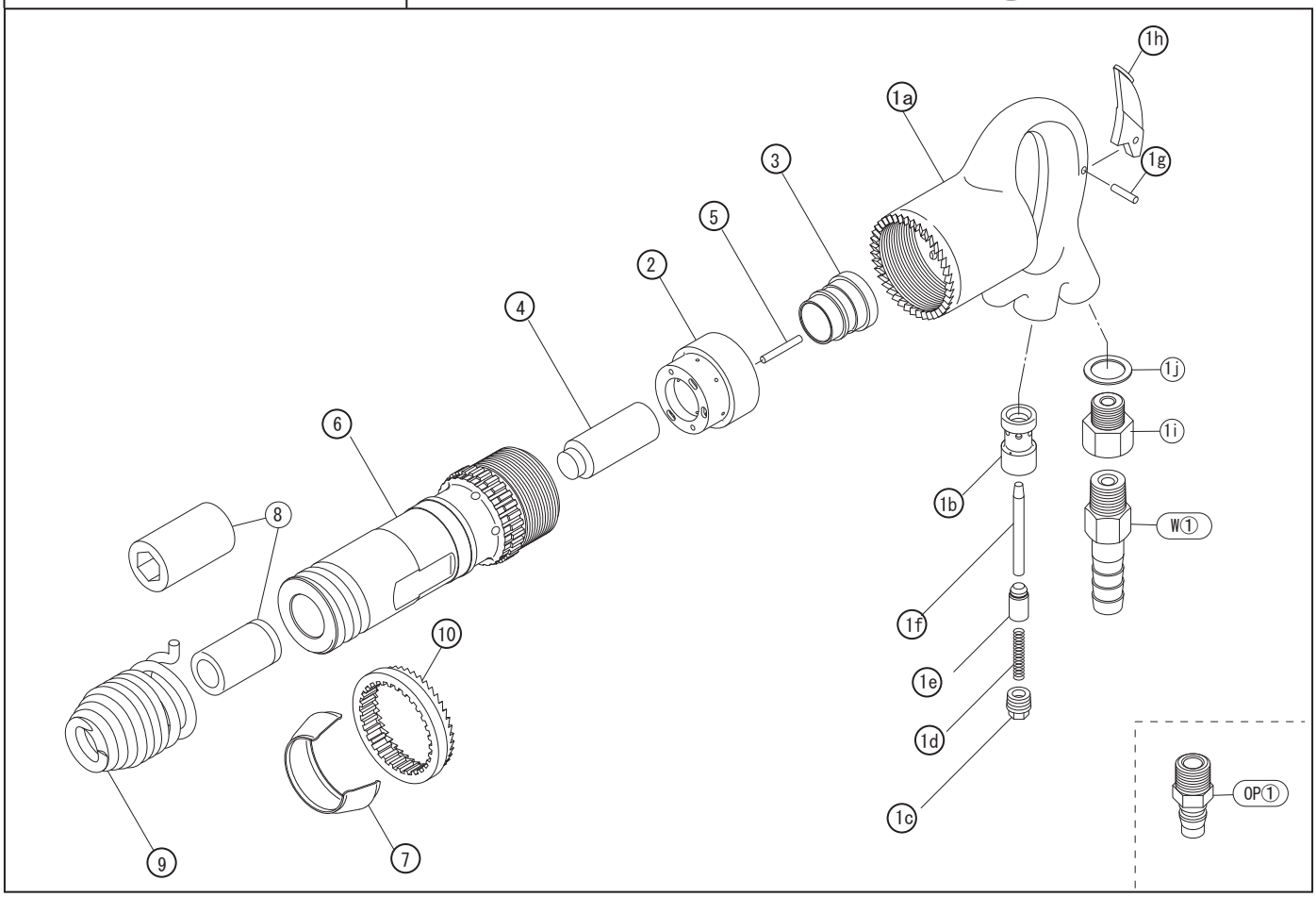

No.	Code	Name Of Part	Q'ty			No.	Code	Name Of Part	Q'ty		
		<AA15A>						<AA10A>			
1	C2300	Handle Assy	1			*4	2315	Piston	1		
1a	2300	Handle	1			*6	2335	Cylinder	1		
1b	2305	Throttle Valve Bush	1					(Option)			
1c	2007	Throttle Cap	1			OP①	9106	Coupling PM23	1		
1d	9201	Throttle Spring	1								
1e	2009	Throttle Valve	1								
1f	2307	Throttle Pin #62,63	1								
1g	9516	Throttle Lever Pin 4*17.8	1								
1h	2310	Throttle Lever	1								
1i	2002	Inlet Bush PT3/8-3/8	1								
1j	2003	Washer	1								
2	2311	Valve Box	1								
3	2313	Valve	1								
*4	2316	Piston <AA15A>	1								
5	2319	Valve Pin 3.8*31	1								
*6	2333	Cylinder <AA15A>	1								
7	2328	Exhaust Cover	1								
8	2130	Cylinder Bush(Round)	1								
〃	2131	Cylinder Bush(Hex.)	1								
9	9279	Retainer Spring	1								
10	2334	Clutch	1								
W①	9035	Hose Nipple(B) 3/8-1/2	1								