air tools

PARTS LIST

■ *Flux Chipper*
【Model】F1A

nks air tools
株式会社中谷機械製作所
NAKATANI KIKAI CO.,LTD.
MADE IN JAPAN

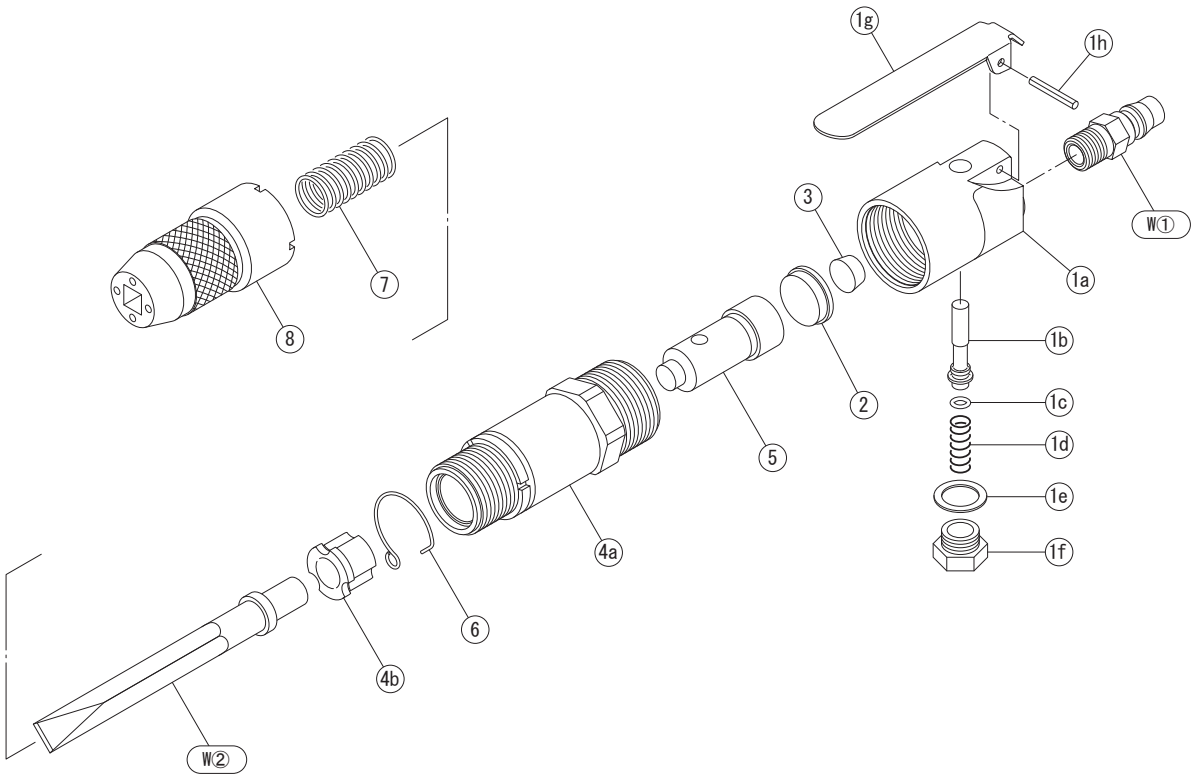

No.	Code	Name Of Part	Q'ty			No.	Code	Name Of Part	Q'ty		
1	C4101	Throttle Body Assy	1								
1a	4101	Throttle Body	1								
1b	4103	Throttle Rod	1								
1c	9400	O-Ring P-4	1								
1d	9230	Throttle Spring	1								
1e	9736	Gasket 14*20*1	1								
1f	4106	Throttle Cap	1								
1g	4108	Throttle Lever	1								
1h	9552	Spring Pin 3*22	1								
2	4110	Cylinder Cap	1								
3	4111	Damper	1								
4	C4112	Cylinder Assy	1								
4a	4112	Cylinder	1								
4b	4113	Cylinder Bush	1								
5	4114	Piston	1								
6	9276	Snap Ring	1								
7	9206	Retainer Spring 17*34	1								
8	4117	Chisel Retainer	1								
W①	9105	Coupling PM22	1								
W②	TF10000	Chisel 110mm	1								
OP	TF10001	Chisel 180mm	1								
OP	4120	Safety Guard	1								